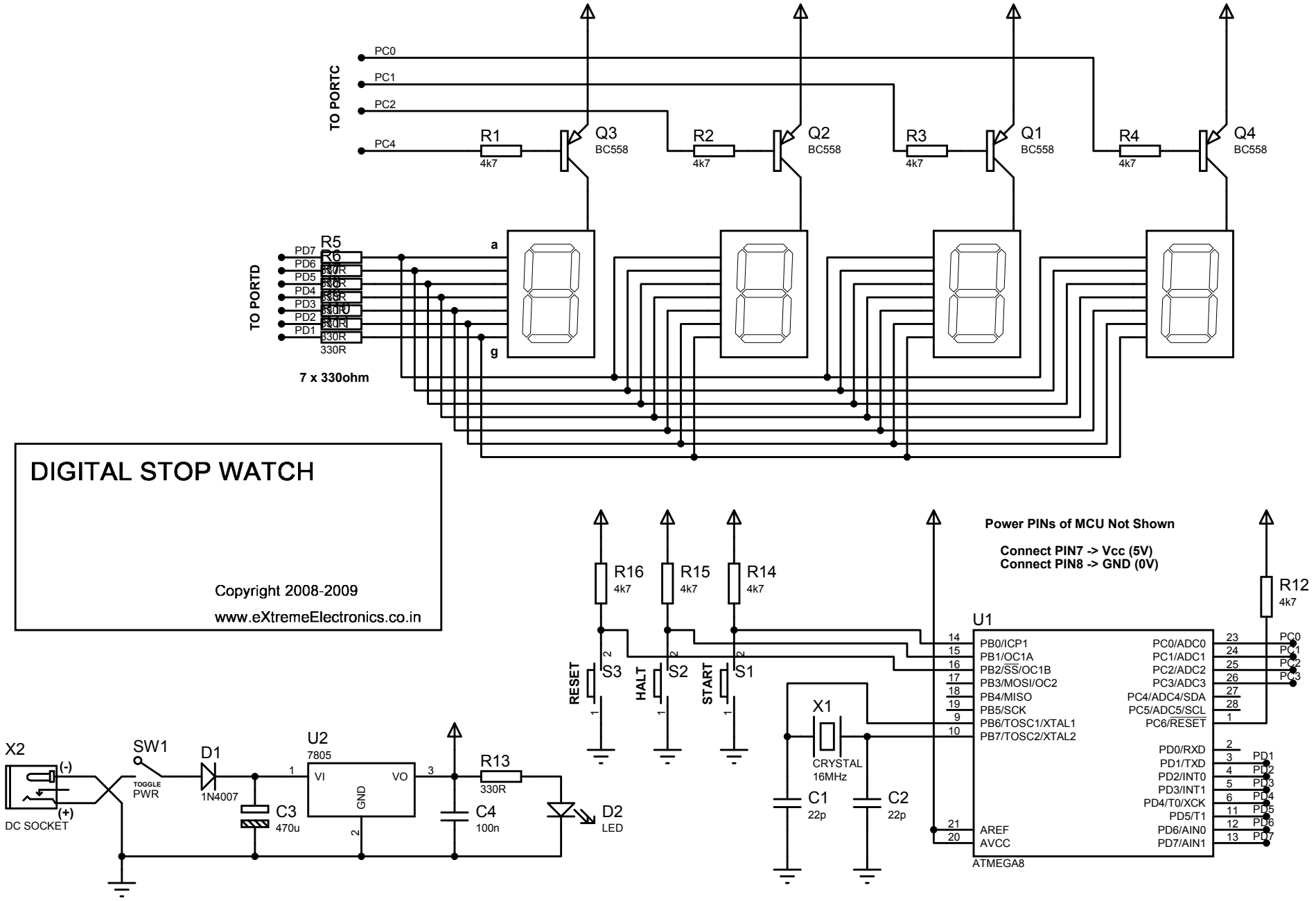
TO PORTC
PC0
PC1
PC2
PC4
R1
4k7
Q3
BC558
R2
4k7
Q2
BC558
R3
4k7
Q1
BC558
R4
4k7
Q4
BC558
TO PORTD
PD7
PD6
PD5
PD4
PD3
PD2
PD1
R5
330R
a
g
7 x 330ohm
DIGITAL STOP WATCH
Copyright 2008-2009
www.eXtremeElectronics.co.in
R16
4k7
R15
4k7
R14
4k7
RESET
S3
HALT
S2
START
S1
Power PINs of MCU Not Shown
Connect PIN7 -> Vcc (5V)
Connect PIN8 -> GND (0V)
R12
4k7
U1
PB0/ICP1
PB1/OC1A
PB2/SS/OC1B
PB3/MOSI/OC2
PB4/MISO
PB5/SCK
PB6/TOSC1/XTAL1
PB7/TOSC2/XTAL2
PC0/ADC0
PC1/ADC1
PC2/ADC2
PC3/ADC3
PC4/ADC4/SDA
PC5/ADC5/SCL
PC6/RESET
PD0/RXD
PD1/TXD
PD2/INT0
PD3/INT1
PD4/T0/XCK
PD5/T1
PD6/AIN0
PD7/AIN1
AREF
AVCC
ATMEGA8
X1
CRYSTAL
16MHz
C1
22p
C2
22p
X2
DC SOCKET
SW1
TOGGLE
PWR
D1
1N4007
C3
470u
U2
7805
VI
VO
GND
C4
100n
R13
330R
D2
LED